INSTRUCTION MANUAL

BEDIENUNGSANLEITUNG
MANUEL D'UTILISATION
MANUAL DE INSTRUCCIONES
MANUALE D'ISTRUZIONI
取扱説明書

Rev07

HUANUO

HNDS6

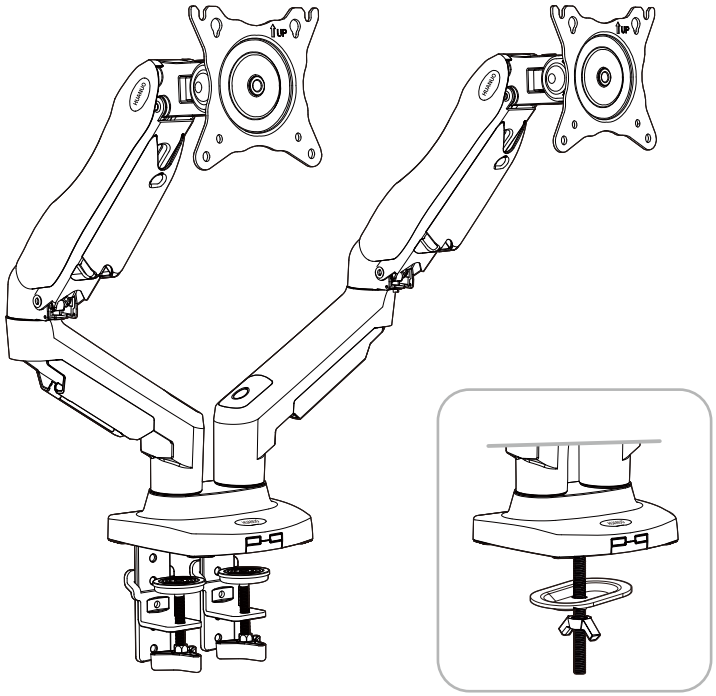

Desk Monitor Arm

1-800-556-0533 (US/CA) Mon-Fri 8am – 8pm (CST)
44-808-196-3874 (UK) Mon-Fri 2pm – 10pm (UTC)
03-4446-2735 (JP) 10:00 – 17:00 (平日のみ)

support@huanuo.com

www.huanuo.com

Product Features / Produktmerkmale / Caractéristiques du produit / Características del producto / Caratteristiche del prodotto / 製品の特徴

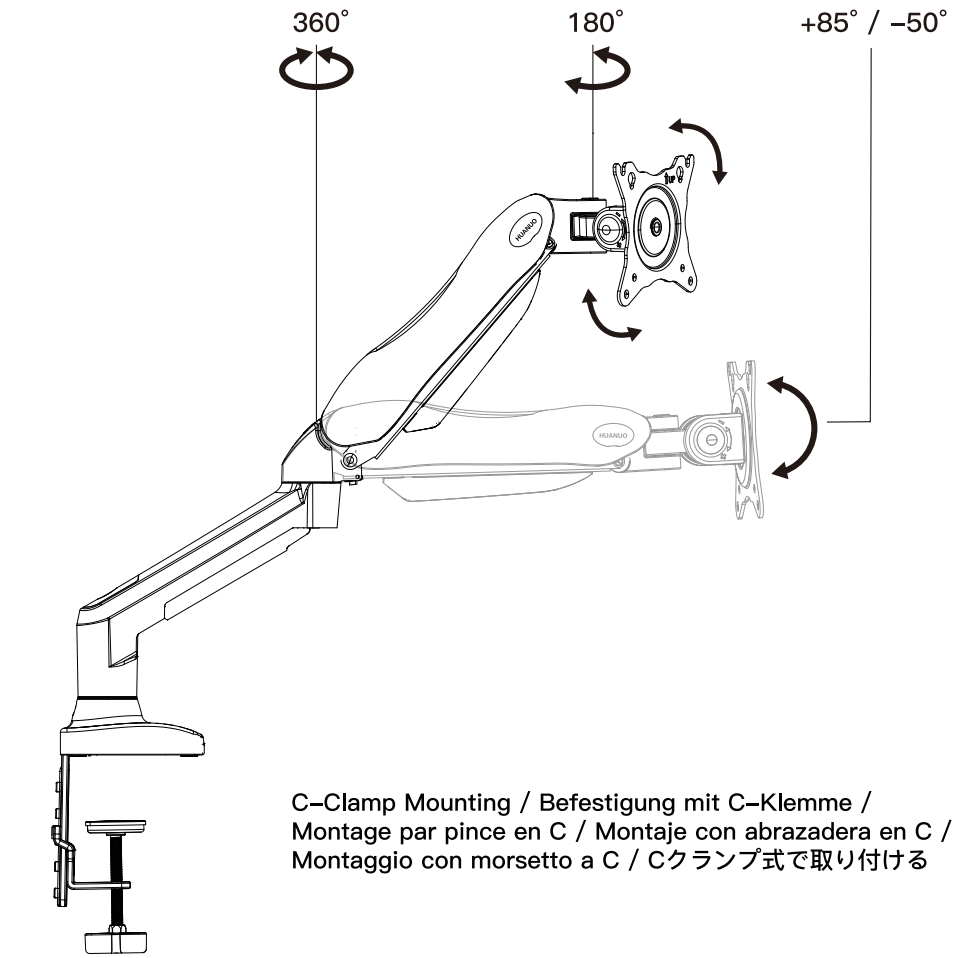

C–Clamp Mounting / Befestigung mit C–Klemme / Montage par pince en C / Montaje con abrazadera en C / Montaggio con morsetto a C / Cクランプ式で取り付ける

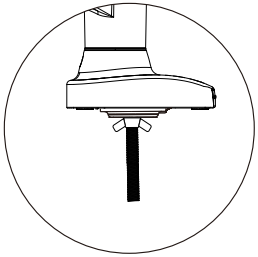

Grommet Mounting / Befestigung mit Kabeldurchführung / Montage par passe–câbles / Montaje con pasacables / Montaggio con passacavo / グロメット式で取り付ける

Before getting started, let's make sure this mount is compatible.

1 Is the VESA pattern of your monitor 75 x 75mm (3″ x 3″) or 100 x 100mm (3.9″ x 3.9″)?

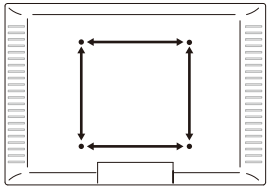

☐ Yes – Perfect!

☐ No – This mount is NOT compatible.

2 Tools Needed (not included)



Electric Drill (optional)



7/16″–7/8″ (11–22mm) Drill Bit (optional)

3 Important Safety Information

NOTE

- Please carefully read all instructions before attempting installation. If you do not understand the instructions or if you have any questions or concerns, please call technical support or email customer service.
- Not all hardware included in this package will be used.

CAUTION

Avoid potential injuries and property damage!

- DO NOT use this product for any purpose that is NOT explicitly specified in this manual. DO NOT exceed weight capacity. We are NOT liable for damage or injury caused by improper mounting, incorrect assembly or inappropriate use.
- Before starting assembly, verify all parts are included and undamaged. DO NOT use damaged or defective parts. If you require replacement parts, please call technical support or email customer service.

⚠WARNING

- This product contains small parts that may pose a choking hazard.
- This product contains gas spring arms which are under high pressure. Do not puncture these arms or expose the arms to fire or flame. If the product is defective, please call technical support or email customer service.
- The information contained in this manual does not cover all possible conditions or variables in relation to the installation of this product.

TENSION ADJUSTMENT SHOULD ONLY BE DONE AFTER MONITOR INSTALLATION

⚠ Attention

DO NOT adjust tension without monitor attached.
Ensure monitor has been securely attached to the mount.

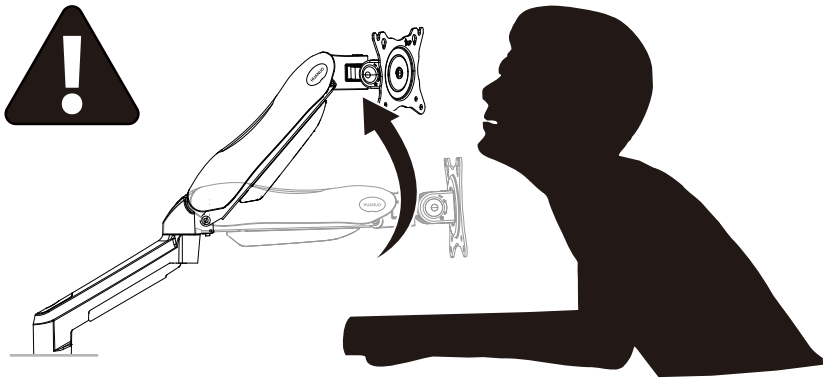

⚠WARNING

- Gas spring arm is under pressure and should be handled with care.
- Failure to follow the instructions may result in damage to the mount and/or personal injury.

Supplied Parts and Hardware

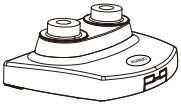

Base

01 x 1

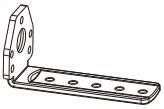

C-Clamp Brace

02 x 2

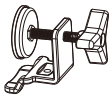

C-Clamp

03 x 2

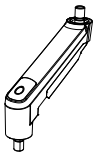

Lower Arm Section

04 x 2

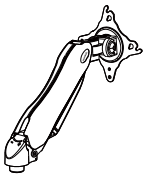

Upper Arm Section

05 x 2

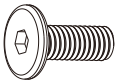

M6 x 12mm
Bolt

A x 6



Grommet Bolt

B x 1



Nut

C x 1



Locking Plate

D x 1



5/32″ (4mm)
Medium Allen Key

E x 1



1/8″ (3mm)
Small Allen Key

F x 1



3/16″ (5mm)
Large Allen Key

G x 1

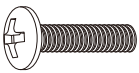

M4 x 12mm
Bolt

H x 8

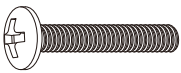

M4 x 30mm
Bolt

I x 8



L13mm
Spacer

J x 8

Step 1 Install the Base

NOTE: If you have a USB cable to connect to the base, see Page 13.

For C-Clamp Mounting,
skip to Option A on Page 05-06.

For Grommet Mounting,
skip to Option B on Page 06-07.

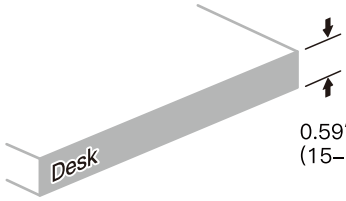

OR

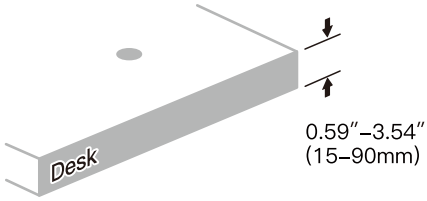

Option A: For C-Clamp Mounting

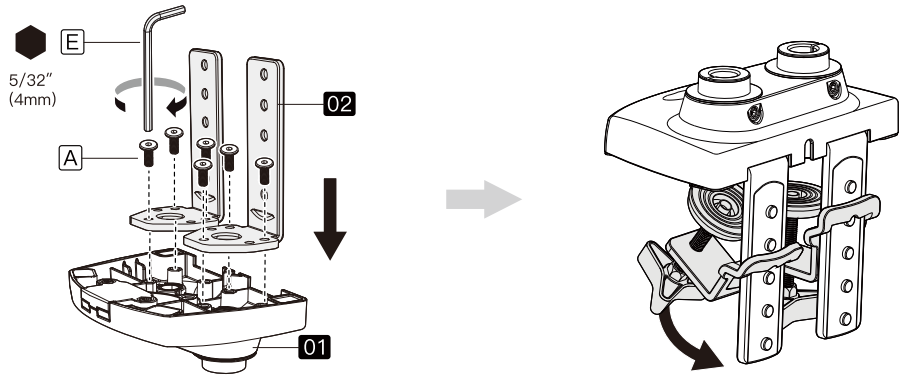

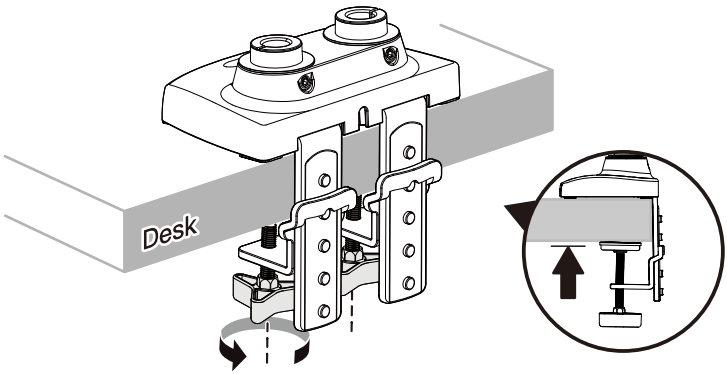

If your desktop is too thin, you may be able to use a wood board or block as a spacer. Please note that the oval C-clamp plate must make full contact with the desk and/or wood spacer.

Example 1

If there is a crossbar underneath the desk, you need to use a spacer that is the same height as the crossbar.

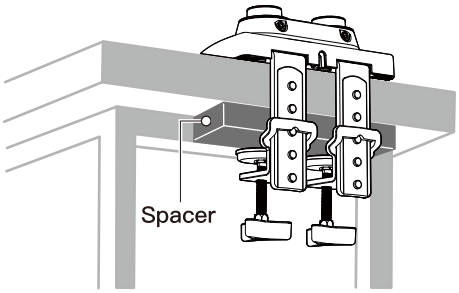

OR

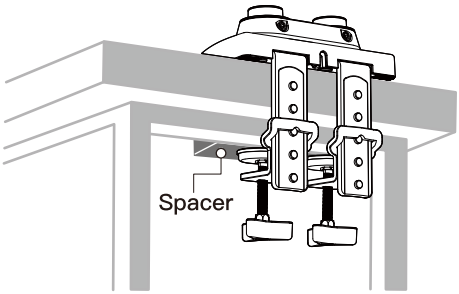

Example 2

A spacer can be placed on top of the desk to fulfill the required dimensions.

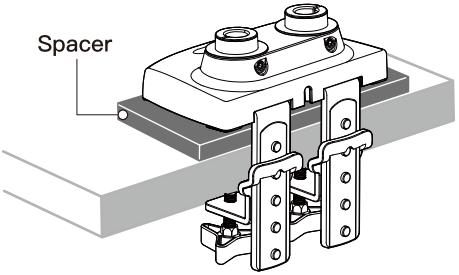

Example 3

A spacer can also be placed on top of the desk to maximize installation height.

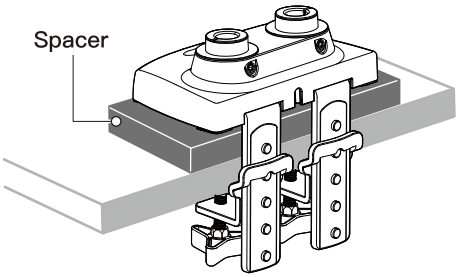

Option B: For Grommet Mounting

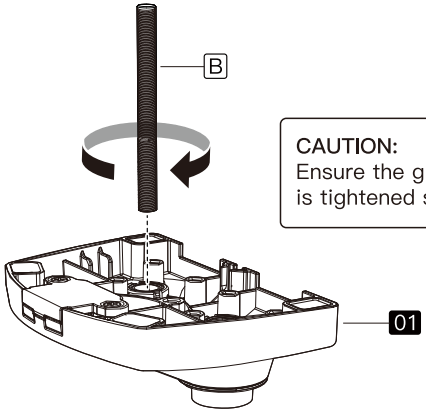

CAUTION:
Ensure the grommet bolt is tightened securely.

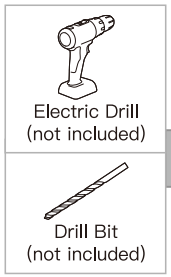

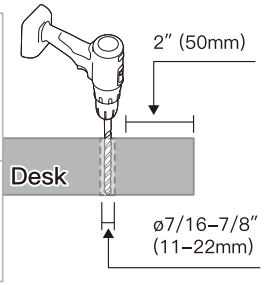

NOTE: If there is no grommet hole on the desk, you will need to drill one. Mark the desired location at least 2″ (50mm) from the desk edge. Drill the hole using a 7/16–7/8″ (11–22mm) drill bit.

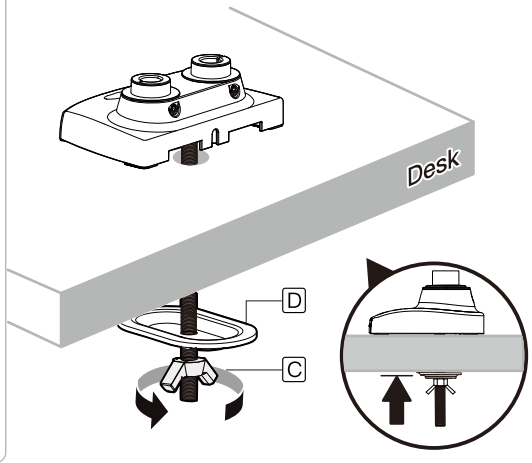

Step 2 Attach the Arm Assembly to the Base

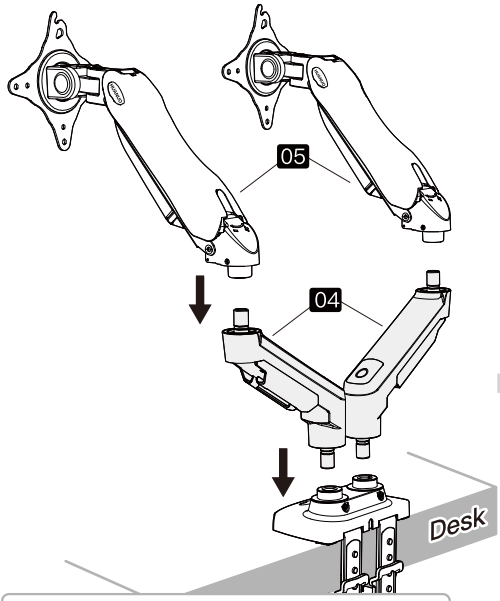

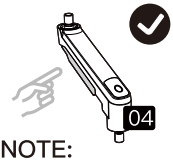

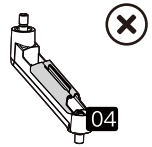

NOTE:
The cable cover on the lower arm should face down.

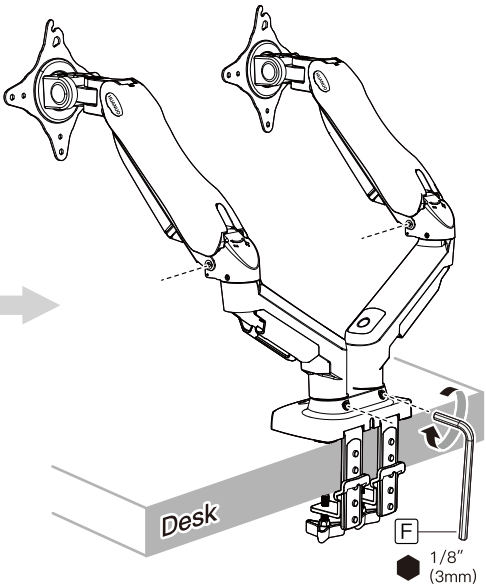

CAUTION:
Do not overtighten, as this may affect the rotation of the arms.

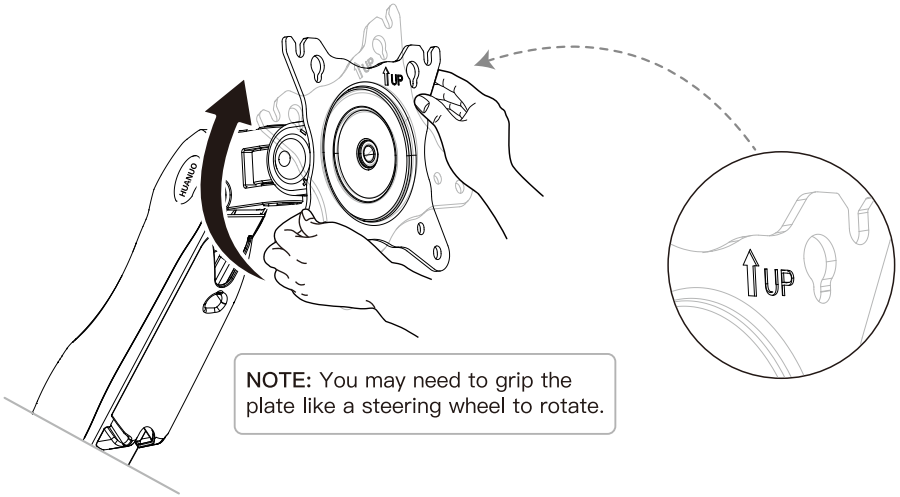

NOTE: You may need to grip the plate like a steering wheel to rotate.

Step 3 Hang the Monitors on the Mount

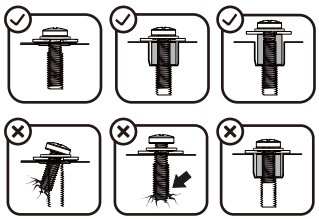

Only one bolt size fits the monitor.

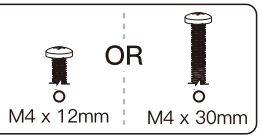

Choose the bolt and spacer configuration that fits your monitor type.
Thread in the top bolts, but do not tighten all the way yet.

For Flat Back Monitor

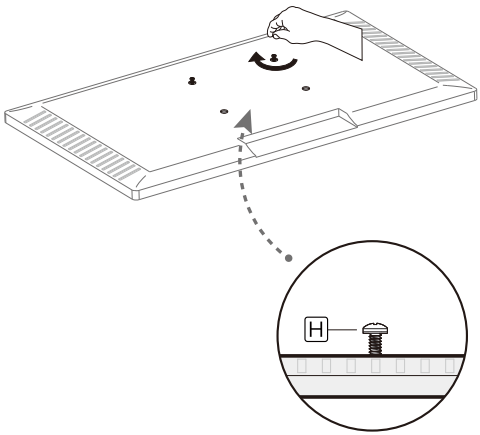

OR

For Curved Back Monitor

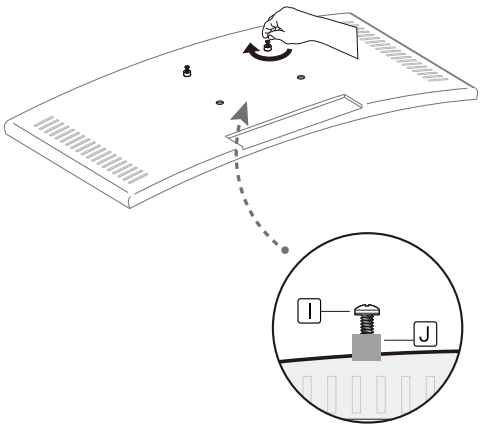

With the top bolts attached, hang the monitor onto the VESA plate using the top 100mm slots or 75mm holes. Thread in the bottom bolts, then firmly tighten all bolts to secure the monitor to the mount arm.

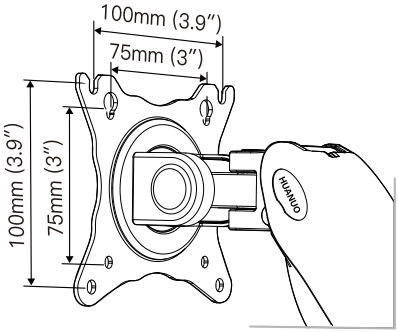

For VESA hole pattern:

- ☑ 75 x 75mm (3″ x 3″)
- ☑ 100 x 100mm (3.9″ x 3.9″)





HEAVY! You may need assistance with this step.

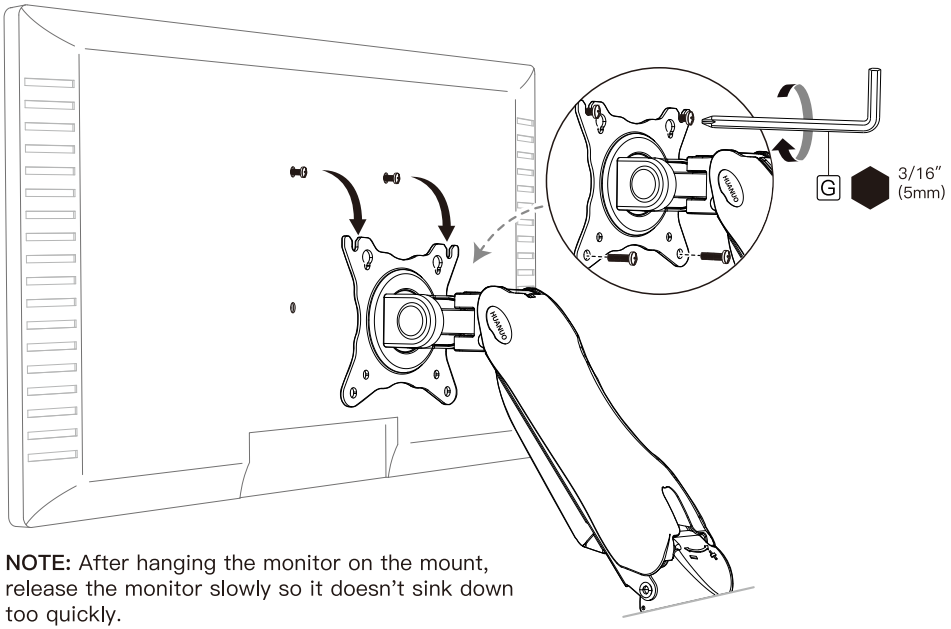

NOTE: After hanging the monitor on the mount, release the monitor slowly so it doesn't sink down too quickly.

Step 4 Adjust Gas Spring Tension

① Hold the upper arm in a horizontal position. In this position, you can access the gas spring tension bolt to increase or decrease tension until the arm stays in position by itself.

CAUTION:
To avoid damage to monitor or mount, always keep the arm in a horizontal position while making adjustments. You may need assistance with this.

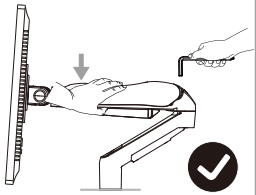

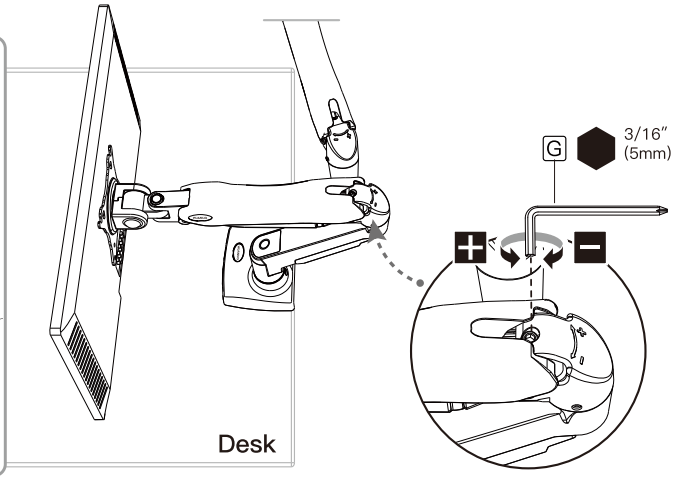

② Use the largest Allen key to adjust gas spring tension until the arm stays in position by itself. Once correctly adjusted, you can raise and lower your monitor and it will stay in position.

Scan the QR code to watch the arm adjustment video.

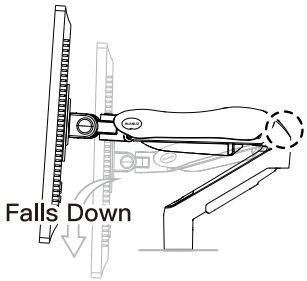



If the monitor falls below the desired height:

Turn counter-clockwise (”+” direction) to increase gas spring tension until the monitor can stay at the desired height by itself.

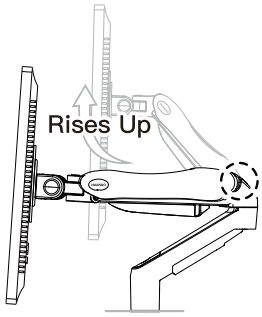



If the monitor rises above the desired height:

Turn clockwise (”–” direction) to reduce gas spring tension until the monitor can stay at the desired height by itself.

Step 5 Swivel Restriction

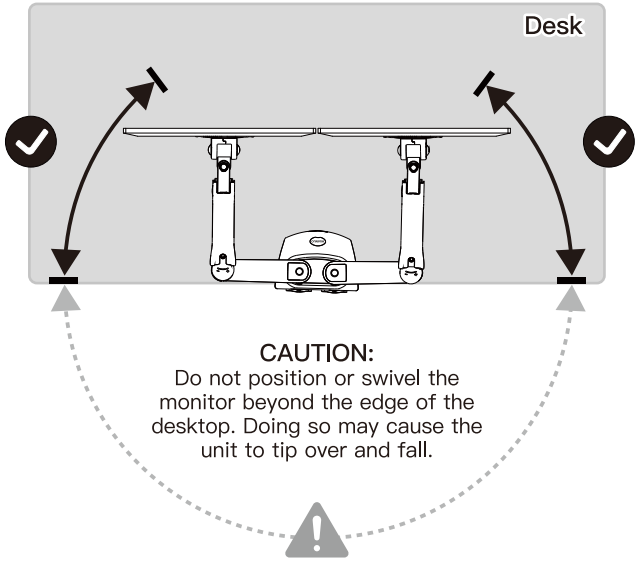

CAUTION:
Do not position or swivel the monitor beyond the edge of the desktop. Doing so may cause the unit to tip over and fall.

Step 6 Tilt Adjustment

Tilt the monitor to the desired angle. If your monitor cannot stay at the desired angle and tilts forward too much, slightly turn the set screw clockwise to raise the monitor, then tilt the monitor.

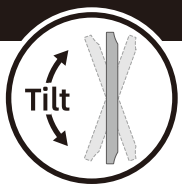

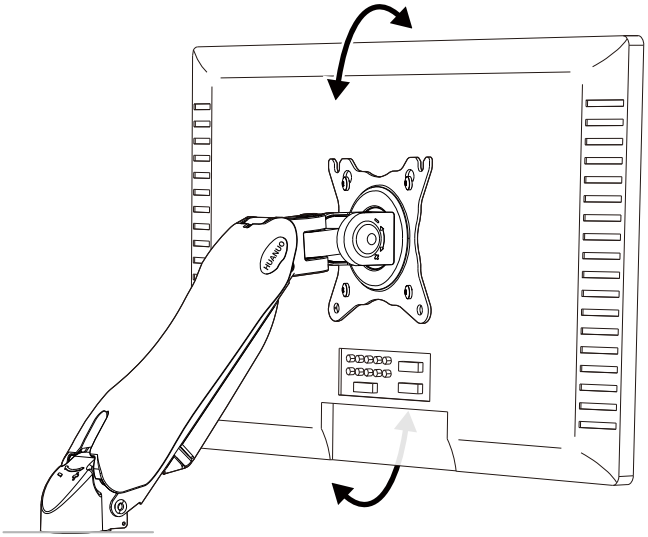

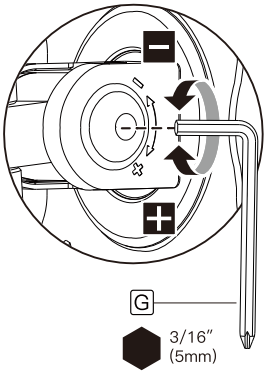

Step 7 Monitor Rotation

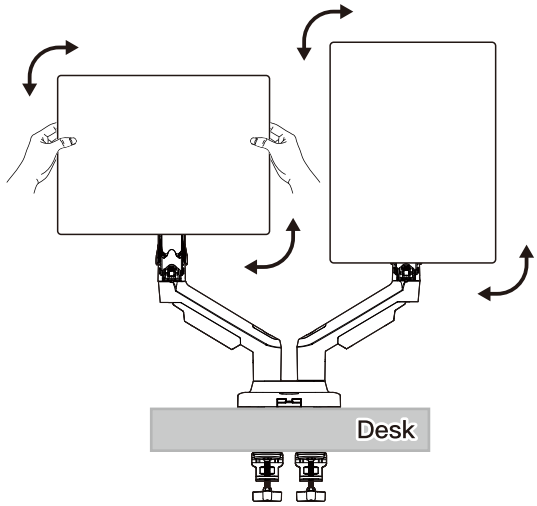

Step 8 Route Cables Down the Arm

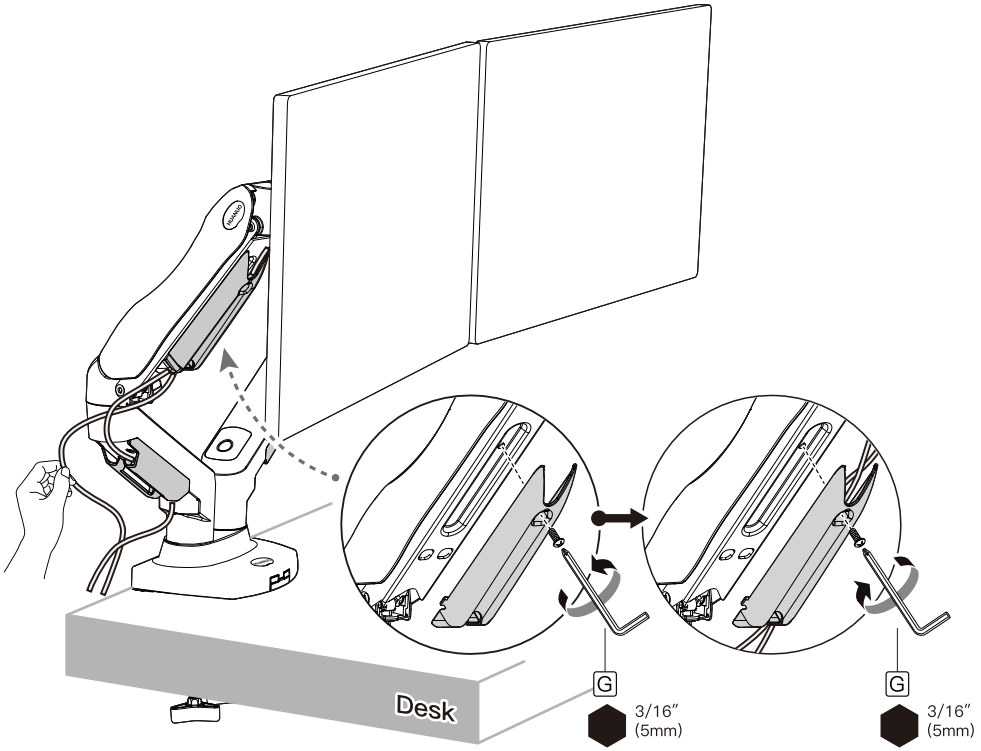

FAQ

Question: How Do I Connect USB Cables to the Base?

Female to Male USB Cables (not included)



For questions about compatible USB cables, please contact product support.

Answer:

① Remove the USB cable cover.

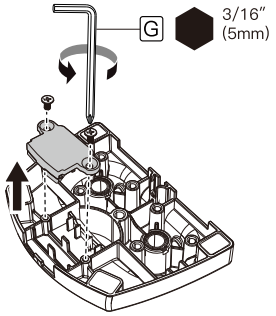

② Snap the two tabs off the cover.

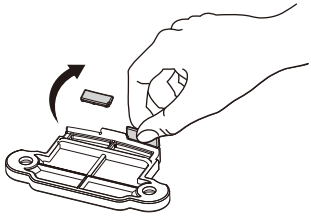

③ Route your USB cables through the base.

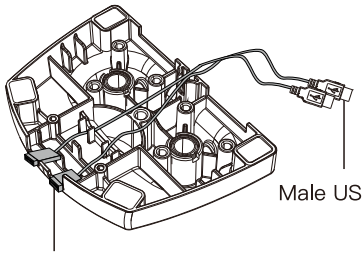

④ Attach the cover to hold the USB cables in the base.

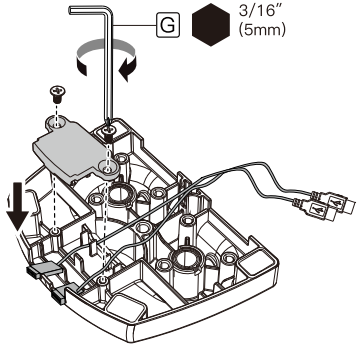

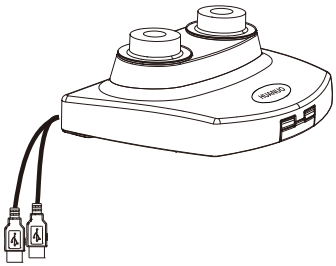

ATTENTION: Be careful not to pinch cables.

HUANUO

1-800-556-0533 (US/CA) Mon-Fri 8am - 8pm (CST)
44-808-196-3874 (UK) Mon-Fri 2pm - 10pm
03-4446-2735 (JP) 10:00 - 17:00（平日のみ）

support@huanuo.com

www.huanuo.com

860-00495-00 Rev07